Mini Police Ride

Be Sure to Read this Manual Before Use

Operation Manual

For Parts and Service, call **Bromley-Inc.**

www.bromley-inc.com

Tel: 847-427-0639

CONTENT

Important Safety Instructions 2

1.Specifications 4

2.Package Contents 5

3. Part name 6

4.Set Up & Installation 7

5. How to play 11

6. Game Option 12

7. Maintenance and Inspection 16

8. Overall Construction 17

Thank you for purchasing Mini Police Ride. We hope you enjoy the product.

This manual contains valuable information about how to operate and maintain your game machine properly and safely. It is intended for the owner and/or personnel in charge of product operation. Carefully read and understand the instructions.

If you need any help during installation and setup please utilize this manual and troubleshooting guide. If the product fails to function properly, *non-technical personnel should under no circumstance attempt to service the machine*. Contact your distributor or manufacturer for help.

Before use, please read **IMPORTANT SAFETY INSTRUCTIONS**.

IMPORTANT SAFETY INSTRUCTIONS

To ensure the safe usage of this product, carefully read and understand these instructions before operating your game. Save these instructions for future reference.

Use this product only as described in this manual. Other uses not recommended may cause fire, electric shock or personal injury. Unplug the game from the outlet when not in use, when moving from one location to another, and before cleaning/servicing.

Explanations which require special attention are indicated by signs of warning. Depending on the potential hazardous degree, the terms: **NOTE**, **NOTICE**, and **WARNING** are used.

NOTE: A NOTE indicates useful hints or information about product usage.
NOTICE: A NOTICE indicates potential damage to product and how to avoid the problem.
WARNING: A WARNING indicates a potential for product damage or serious personal Injury.

It is important to understand the meaning of the following HAZARD SIGNS before continuing:

High Voltage and Shock Hazard:

High voltage can cause electric shock.
Turn off/unplug power before servicing.

High Temperature Hazard:

This part may cause scalding.
Do not touch. Surface may be hot.

No Touching Hazard:

This part may be hot or can cause electric shock.
Do not touch.
Use the following safety guidelines to help ensure your own personal safety and to help protect your equipment and surrounding environment from potential damage.

⚠ This product is an indoor game machine. Do not install outdoors.

Avoid installing in the following places to prevent fire, electric shock, injury and/or machine malfunctioning:

- Places subject to rain/moisture, or places subject to high humidity.
- Places subject to direct sunlight, or places subject to extremely hot or cold temperatures to ensure that it is used within the specified operating range.
- Places where inflammable gas may be present or in the vicinity of highly inflammable/volatile chemicals or items that can easily catch fire
- On unstable or sloped surfaces. The machine may topple or cause unforeseen accidents.
- Vicinity of fire exits, fire extinguishers etc that may block/prevent safety measures

⚠ WARNING

Non-technical personnel who do not have technical knowledge and Expertise should refrain from performing such work that this manual require or perform tasks which are not explained in this manual. Failing to comply can cause severe accidents such as electric shock or other serious injuries.

WARNING: To reduce the risk of fire, electric shock or personal injury, unplug or disconnect the machine from the power supply before servicing.

Note: The contents of this manual may be updated without notice.

1. SPECIFICATIONS

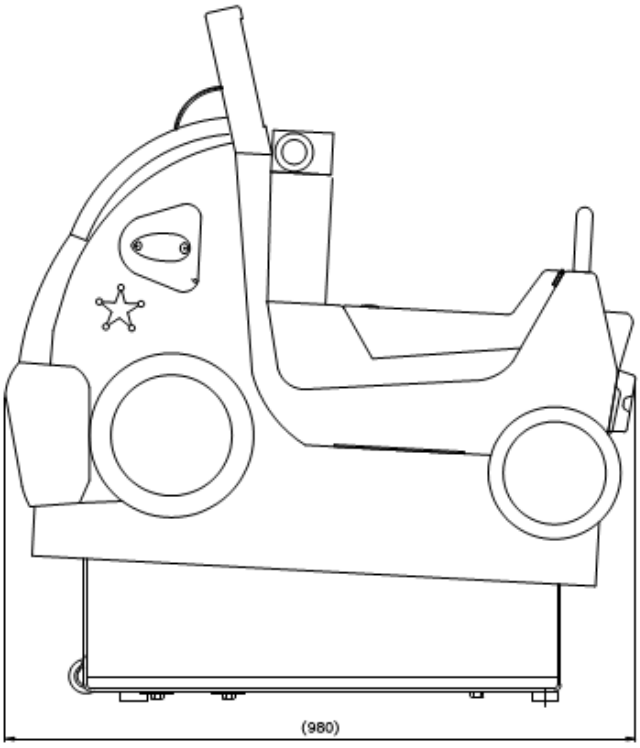

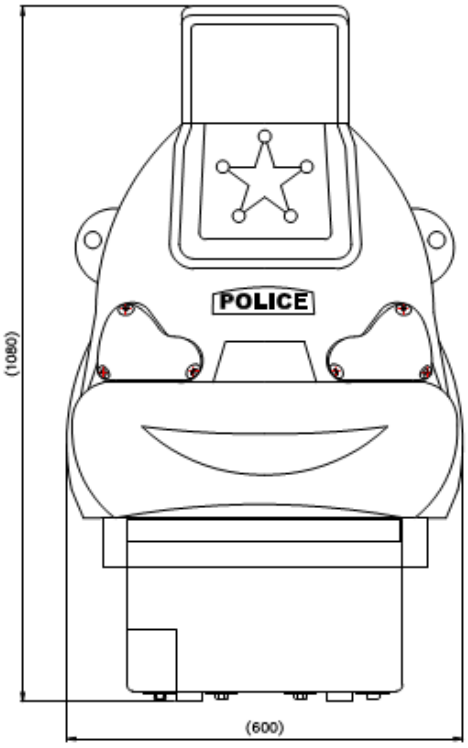

Rated power supply:	AC110V 50/60Hz
Min. Power consumption:	25W
Max. Power consumption:	350W
Dimensions:	W600×D980×H1080(mm)
Weight:	About 100kgs

⚠ **NOTICE:** After turning off the game, please wait at least 1 minute before restarting again.

Note: Game parameters are subject to change without notice.

2. PACKAGE CONTENTS

Open the package and make sure all the items are included:

- 1 x Body Assembly
- Following accessories

No.	Part No.	Name	Spec.	Qty.	Illustration	Note
1	M102-422-000	Fuse	T10A/250 φ6-300	1		Choose by area
2	M102-705-000	Manual	English	1		Choose by area
3	M102-417-000	CEC Key	C582	2		

If any items are found to be missing, please contact your sales representative for help immediately.

NOTE: Part models are subject to change without notice.

3. PART NAMES

FRONT VIEW

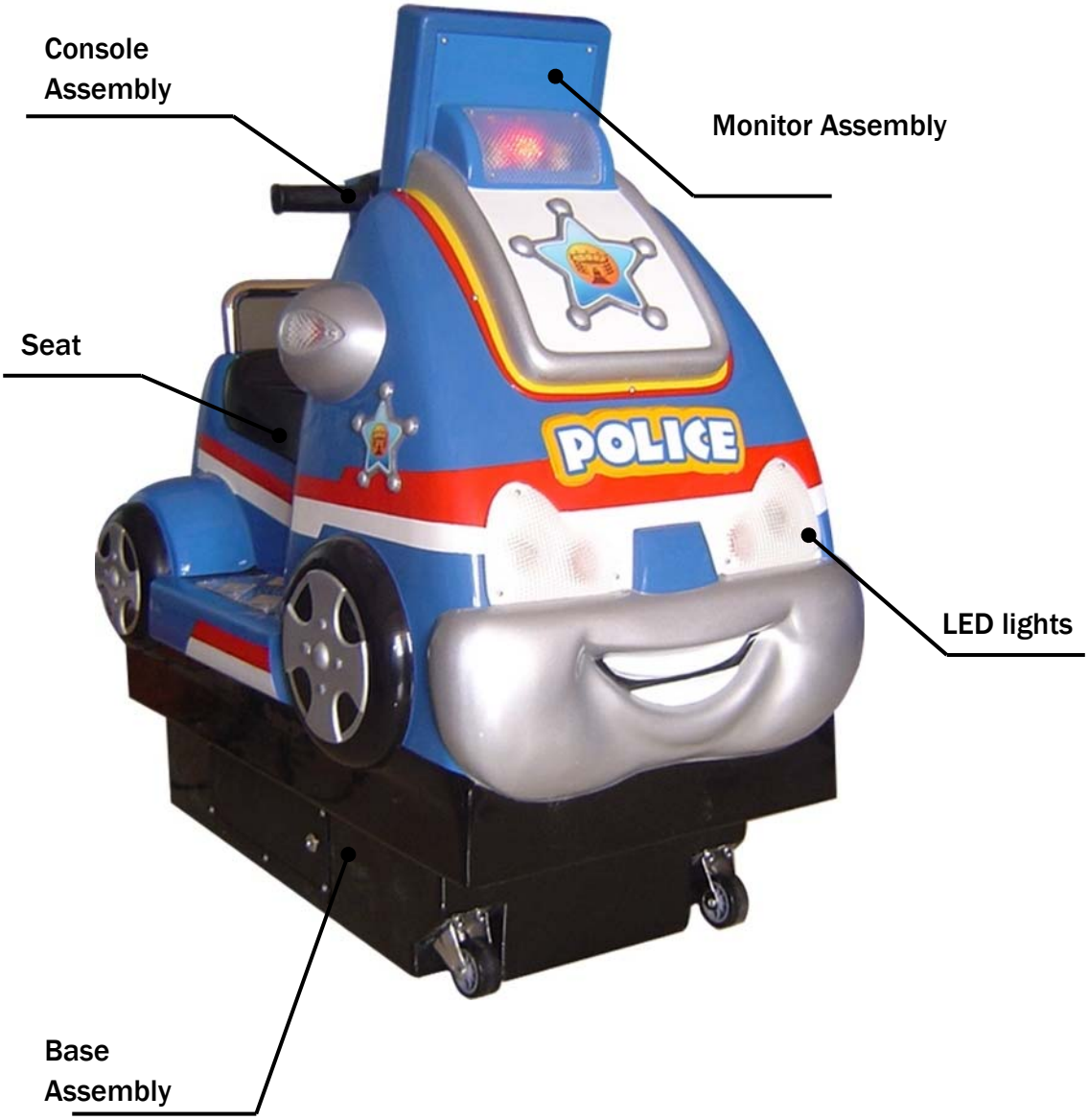

4. SET UP & INSTALLATION

⚠ This product is an indoor game machine. Do not install outdoors.

- Refer to IMPORTANT SAFETY INSTRUCTIONS (Pg. 3) for places to avoid
- Place the unit on a dry level surface
- Ventilation openings in the back of the unit must not be obstructed by objects or by wall.

4.1 Play Zone

This machine requires space for playing and for maintenance as shown below.
Leave space around the game upon installation:

Service area：
Play area：

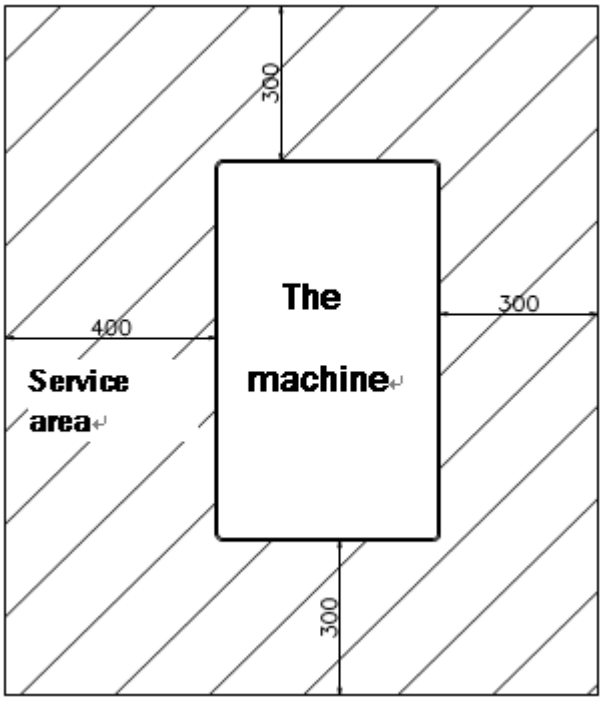

(mm)

4.2 Level Adjustment

Install this machine on a flat surface. Adjust levers to lift casters off the ground to level the game. If the game is installed on an unsuitable floor, it could cause a malfunction.

To fix the game, adjust the Leveler down until it touches the floor, lifting the casters off the ground by 5mm. Repeat the same for all levelers.

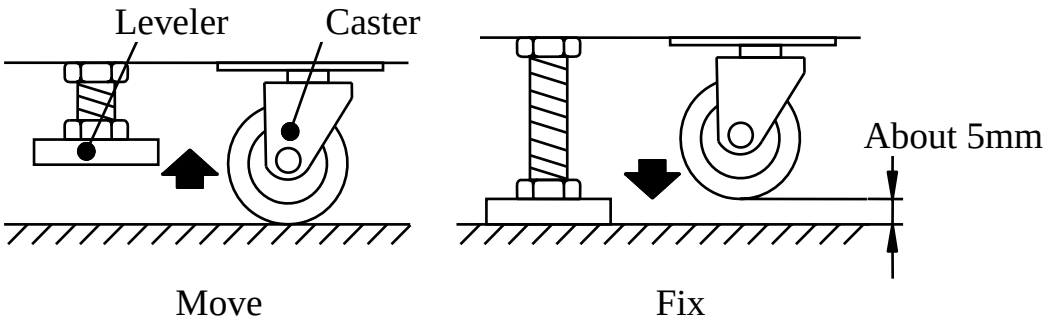

NOTICE

Make sure the machine is level with the ground and all the adjustable legs should stick to the floor closely.

4.3 Transporting the Game

If you need to move the game, adjust the levelers back to an “up” position so the casters touch the ground.

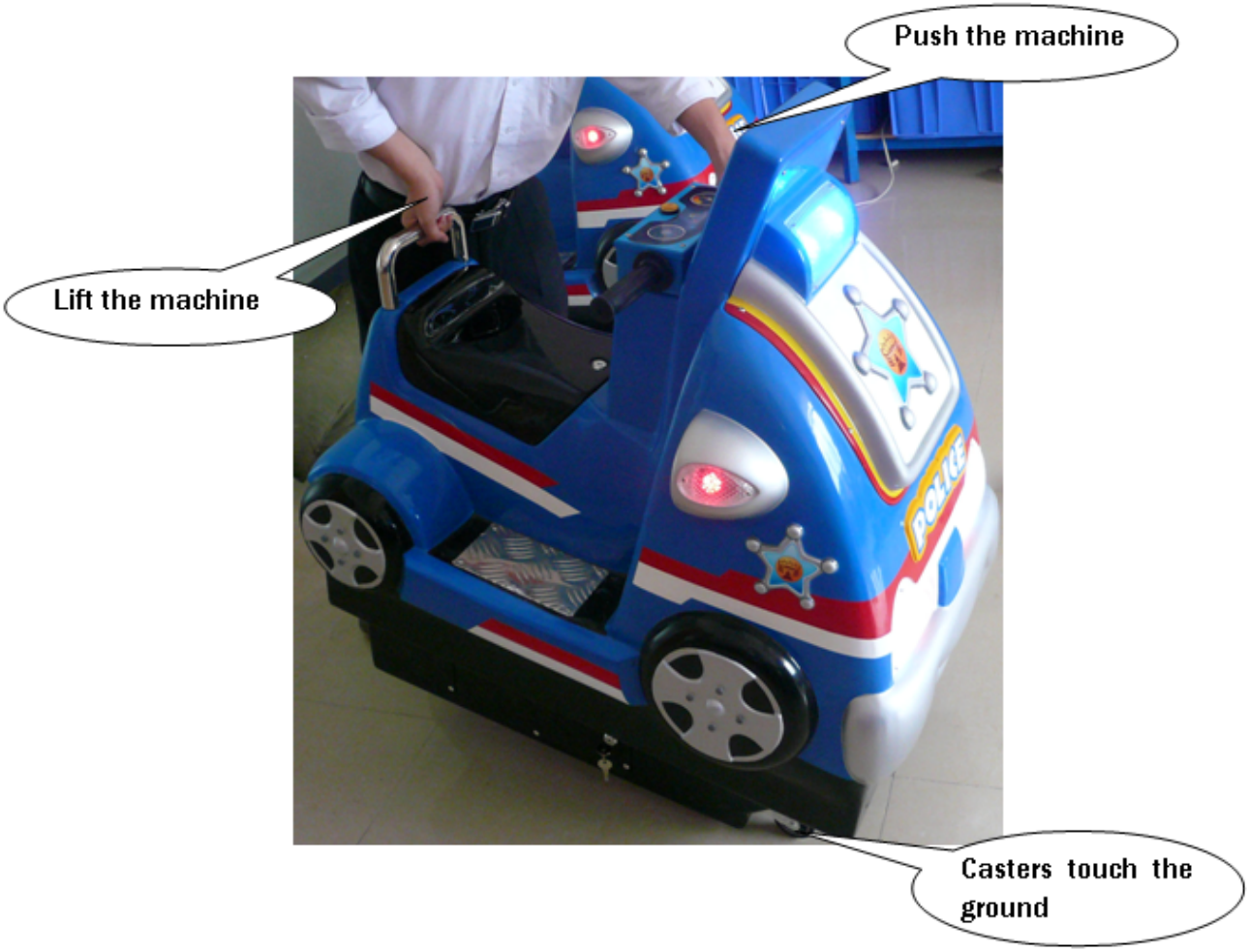

⚠ NOTICE

- Be careful not to damage the machine during transport.
- The machine should be handled with care when bringing it down from a higher level.
- Always unplug the game before moving.
- Keep the machine in upright position during transport.
- For longer distance transport, package the game properly to prevent damages

4.4 Connecting Power

⚠ **WARNING**: Check the voltage rating before you connect the equipment to an electrical outlet to ensure that the required voltage and frequency match the available power source. Please refer the label of the machine.

- Do not plug the equipment power cables into an electrical outlet if the power cable is damaged.
- Avoid putting many loads on one electrical outlet as it could generate heat and fire resulting from overload.
- Connect the grounding conductor to the earth terminal (GND):

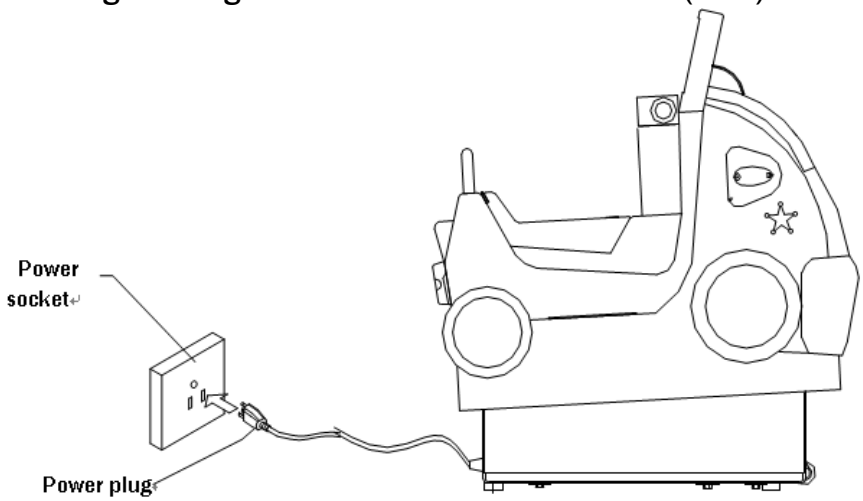

⚠ **WARNING**

Ensure no heavy objects rest on the power cord. Check to make sure the game cabinet does not sit on the power cord as this could damage the cord and become hazardous.

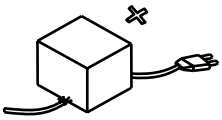

To disconnect the game, grip the plug and pull it from the wall outlet. Never pull by the cord.

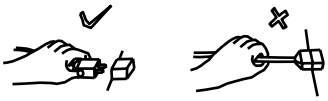

To prevent electric shock, do not touch the power plug when hand is wet.

Ensure that nothing rests on the power cord and that it is not located where it can be stepped on or tripped over.

5. HOW TO PLAY

① Insert coin(s)

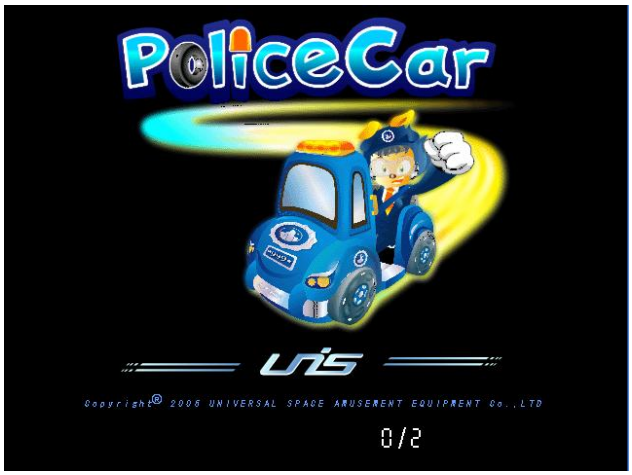

② Game starts. Turn the handle left or right to change the direction of the police car displayed on the screen.

③ Pick up special items along the way for bonuses.

④ Game ends once the time runs out, Insert coin(s) to play again.

6. GAME OPTIONS

6.1 Operation：

Press the Reset and Service button（or turn left & turn right on the handle）to select the options. Enter menu, if you want to adjust one item, please wait until the desired item is highlighted. Then press the (ATTACK button) to confirm. Then press the Reset and Service button to adjust. Press the Reset button to decrease and the Service button to increase. Press the Attack button to exit after adjustments are completed. Press Reset and Service button switch to SAVE（CANCEL）. Press ATTACK button for option to save or cancel changes.

6.2 IO Input Settings:

If the I/O input of the AMAZON board is corrupted, connect it to the free port. If the attack input is corrupted in the settings option, press and hold down any of the buttons for 5 seconds. Count down will display and attack action will play after 10 seconds.

6.3 Press the setting button to enter the Setting Menu:

SETTING

Game Setting
Business Report
Input config
Output config
Close

✧ Game settings：

Game Setting	
Time	<1:00>
Coin	< 2 >
Free play	< OFF >
Sound vol	< 100 >
Music vol	< 100 >
Score to ticket	<5000> = 1 Ticket
Save	Cancel

Options：

1. TIME：Game time setting
2. COIN：Coins per round.
3. FREE PLAY：The default Setting is OFF. If set to ON, press the ATTACK button to input credit amount.
4. SOUND VOL：Sets the volume of the game. Such as hitting, effect etc.
5. MUSIC VOL：Sets the background music.
6. SCORE TO TICKET： Sets score(s) required per ticket
7. SAVE：Save settings.
8. CANCEL：Exit without saving.

✧ Business report：

Business Report	
Insert Coin:	0
Service coin:	0
Out ticket:	0
Game:	0
Cancel	

Options：

1. Insert Coin：Shows the amount of coins inserted.
2. Service Coin：Shows the number of credits by coin SW.
3. Out Ticket：Shows ticket payout
4. Game：Shows number of games
5. CANCEL：Cancel and go back

✧ Input config

```
                    Input config
Config              <IN_CONFIGA>
InCoin              <IN_COIN1A >
TicketMachFixed     <IN_COIN2A >
Left                <IN_LEFT1PA>
Right               <IN_RIGHT1PA>
Up                  <IN_UP1PA>
Down                <IN_DOWN1PA>
Attack              <IN_BUT_A1PA>

Save            Cancel
```

Options：

1. Config：Sets the button config（Input config）
2. InCoin：coins button config（Input config）
3. TicketMachFixed：ticket reset button config（Input config）
4. Left：The direction of the left button config（Input config）
5. Right：The direction of the right button config（Input config）
6. Up：The direction of upper button config（Input config）
7. Down：The direction of down button config（Input config）
8. Attack：ATTACK (confirm) button config（Input config）

9. SAVE：Save settings and return.

10. CANCEL：Cancel and back to menu

✧ Output Config：

```
                    Output config
TicketMeter         <OUT_OUT15>
Light1              <OUT_COINCNT2>
Light2              <OUT_COINCNT1>
Light3              <OUT_COIN_LOUT2>
Light4              <OUT_COIN_Lout1>
TicketMach          <OUT_POUT>
MainMotor           <OUT_OUT0>
AttackBtn           <OUT_OUT1>
CoinCount           <OUT_OUT2>
AlarmLight          <OUT_OUT3>

Save            Cancel
```

Options：

1. TicketMeter：Ticket meter output interface (Disable)
2. Light1：Light 1 output interface
3. Light2：Light 2 output interface
4. Light3：Light 3 output interface
5. Light4：Light 4 output interface
6. TicketMach：Ticket dispenser output interface (nonuse)
7. MainMotor： Main motor output
8. AttackBtn： Attack button lamp output
9. CoinCount：Coins counter output
10. AlarmLight： Alarm light output
11. SAVE：Save setting and back to menu
12. CANCEL：exit without saving and back to menu

6.4. IO Setting：

To adjust DIP, refer to the I/O chart.

Input：

Input		Content	Input		Content
JP3	12V	+12V			
	GND	GND			
	GND	GND			
	+5V	+5V			

Output：

Output		Content	Output		Content
J1	GND	GND	J3	GND	
	12V	12V		0T9	
	0T1	Main motor		+5V	
	0T2	Button lamp		0T10	
	0T3	Coin counter		0T11	
	0T4	Alarm lamp		GND	
	0T5	Headlight_L+ strip lamp 1	J4	CTL	
	0T6	Headlight_R+ strip lamp 2		12V	
	0T7	Alarm light blue		GND	
	0T8	Taillight（3 pcs）		SIG	
J2	GND		J5	U1	L-Vol POT 1
	0T9			C1	L-Vol POT 2
	+5V			G	L-Vol POT 3
	0T10			U2	R-Vol POT 1
	0T11			C2	R-Vol POT 2
	GND			G	R-Vol POT 3

NOTE

The above are subject to change without notice.

7. MAINTENANCE, INSPECTION

7.1 Safety Check

Check the points listed before operating the machine. These checks are necessary for safe machine operation:

1. Try to run the game before operation each day.
2. Conduct monthly routine checks of game components ensure good working condition
3. Check the machine regularly for dust and clean when necessary.

Note: Parts and components require preventative maintenance to be kept running smoothly

7.2 Handling Precautions

When installing or inspecting the machine, be very careful of the following points and pay attention to ensure that the player can enjoy the game safely. Non-compliance with the following points or inappropriate handling running counter to the cautionary matters herein stated can cause personal injury or damage to the machine

WARNING

- Before servicing the machine, be sure to turn power off. Servicing without turning the power off can cause electric shock or short circuit.
- To avoid electric shock or short circuit, do not plug then unplug the power quickly
- Do not expose power cords and earth wires, these are susceptible to damage.
- Damaged cords and wires can cause electric shock or short circuit and should be replaced immediately.
- When or after installing the product, avoid pulling the power cord to prevent unnecessary wear and tear. Use the power button to disconnect power.
- In case the power cord is damaged, ask for replacement through where the product was purchased from or replace locally. Continued usage of damaged cord can cause fire, electric shock or leakage.
- Perform grounding appropriately. Inappropriate grounding can cause electric shock.
- Use fuses that meet specified rating. Fuses exceeding can cause an electric shock.
- Should a problem occur, turn off the power immediately and stop operating the machine. Unplug the power cord of the service outlet. Operating the machine without correcting the problem may cause a fire or injuries.
- Insert the power plug securely into the outlet. Poor contact may cause overheating, resulting in fire or burns.
- To ensure the warning labels attached on the machine are visible and legible, install the machine in a well-lit location, and keep the labels clean at all times. Make sure the labels are not hidden behind other game machines.

8. OVERALL CONSTRUCTION

8.1 The Main Assembly

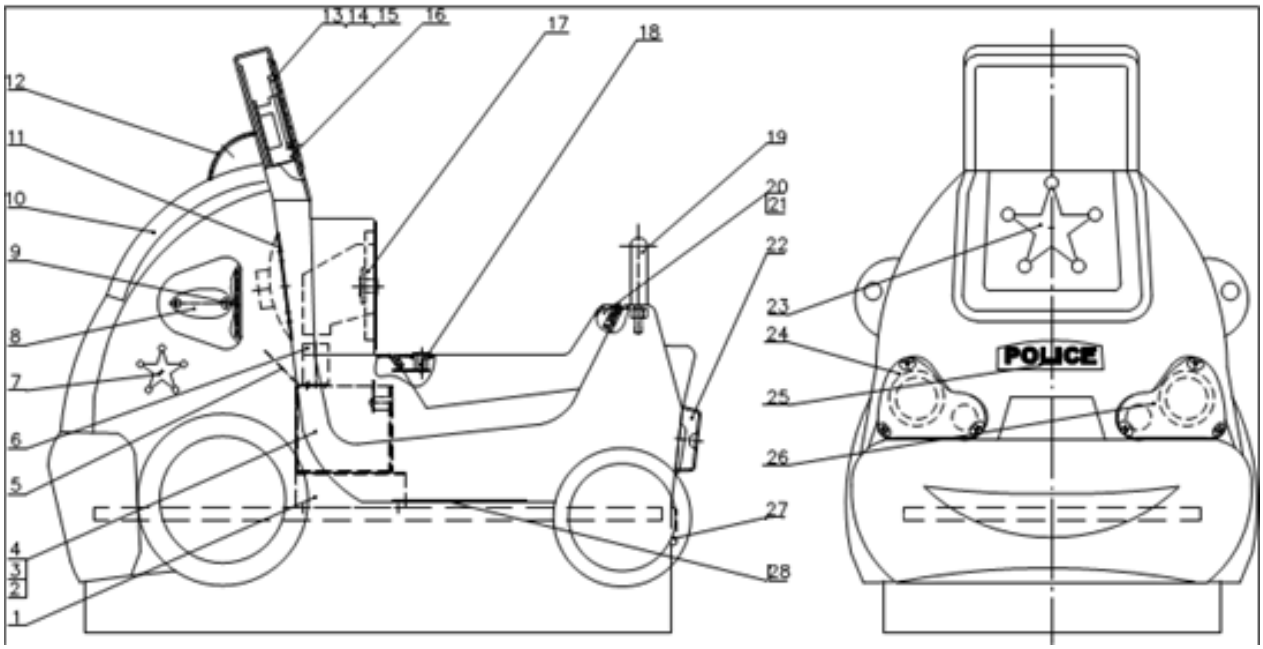

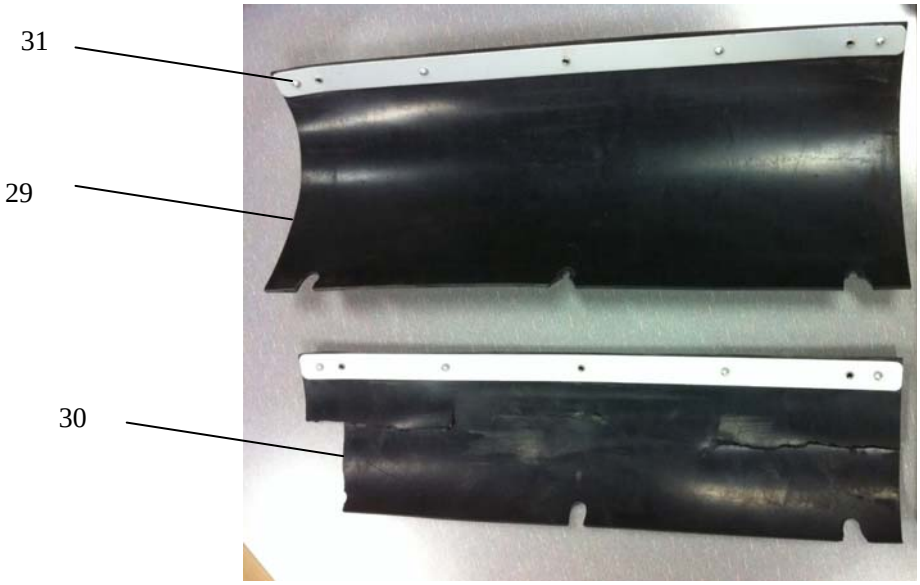

No.	Part No.	Diagram No.	Name	Qty	Spec.	Note
1	M102-101-000	MNJCC-01-08	Coin box crust	1	Electrolytic sheet	
2	M102-102-000	MNJCC-01-07	Coin box	1	Electrolytic sheet	
3	M102-601-000	MNJCC-01-21	Coin box damping board	1	Black EVA	
4	M102-401-000	25302222001	Lock	1	C852	
5	M102-103-000	MNJCC-01-20	Test button board	1	Electrolytic sheet	
6	M102-104-000	MNJCC-01-09	Coin pipe	1	Electrolytic sheet	
7	M102-701-000	MNJCC-HM-06	Tow side decal	2	PVC100u 82X82	
8	M102-602-000	MNJCC-01-14	Turning lamp plastic	2	PMMA（Organic glass）	
9	M102-603-000	MNJCC-01-11	Rearview mirror Organic film	2	Organic film	
10	M102-604-000	MNJCC-01-02	Front FRP	1	FRP	
11	M102-105-000	MNJCC-01-05	Speaker net	2		
12	M102-605-000	MNJCC-01-16	Alarm light plastic	1	PMMA（acrylic）	
13	M102-606-000	MNJCC-01-06	LCD panel	1	Clarity acrylic	
14	M102-607-000	MNJCC-01-22	LCD long side	2	Black EVA	
15	M102-608-000	MNJCC-01-23	LCD short side	2	Black EVA	
16	M102-106-000	MNJCC-01-04	LCD bracket	1	Electrolytic sheet	
17	M102-107-000	MNJCC-01-19	Coin door	1	Q235	
18	M102-108-000	MNJCC-01-24	Lock stator	1	Electrolytic sheet	
19	M102-109-000	MNJCC-01-17	Seat handle	1	Stainless steel pipe	
20	M102-609-000	MNJCC-01-03	Seat FRP	1	FRP	
21	M102-110-000	MNJCC-01-18	Seat hinge	1	Q235	
22	M102-610-000	MNJCC-01-15	Taillight plastic	1	PMMA（Organic film）	
23	M102-703-000	MNJCC-HM-05	Front decal	1	PVC100u 138X138	
24	M102-611-000	MNJCC-01-12	Left headlight plastic	1	PMMA（Organic film）	
25	M102-704-000	MNJCC-HM-04	POLICE decal	1	PVC100u 250X70	
26	M102-612-000	MNJCC-01-13	Right headlight plastic	1	PMMA（Organic film）	
27	M102-613-000	MNJCC-01-01	Body FRP	1	FRP	
28	M102-111-000	MNJCC-01-10	Footplate	2	Aluminum board	
29	M102-445-000	MNJCC-04	Front Rubber Guard	1	Rubber	
30	M102-447-000	MNJCC-05	Back Rubber Guard	1	Rubber	
31	M102-129-000	MNJCC-06	Rubber bracket	2	Metal	

8.2 Base

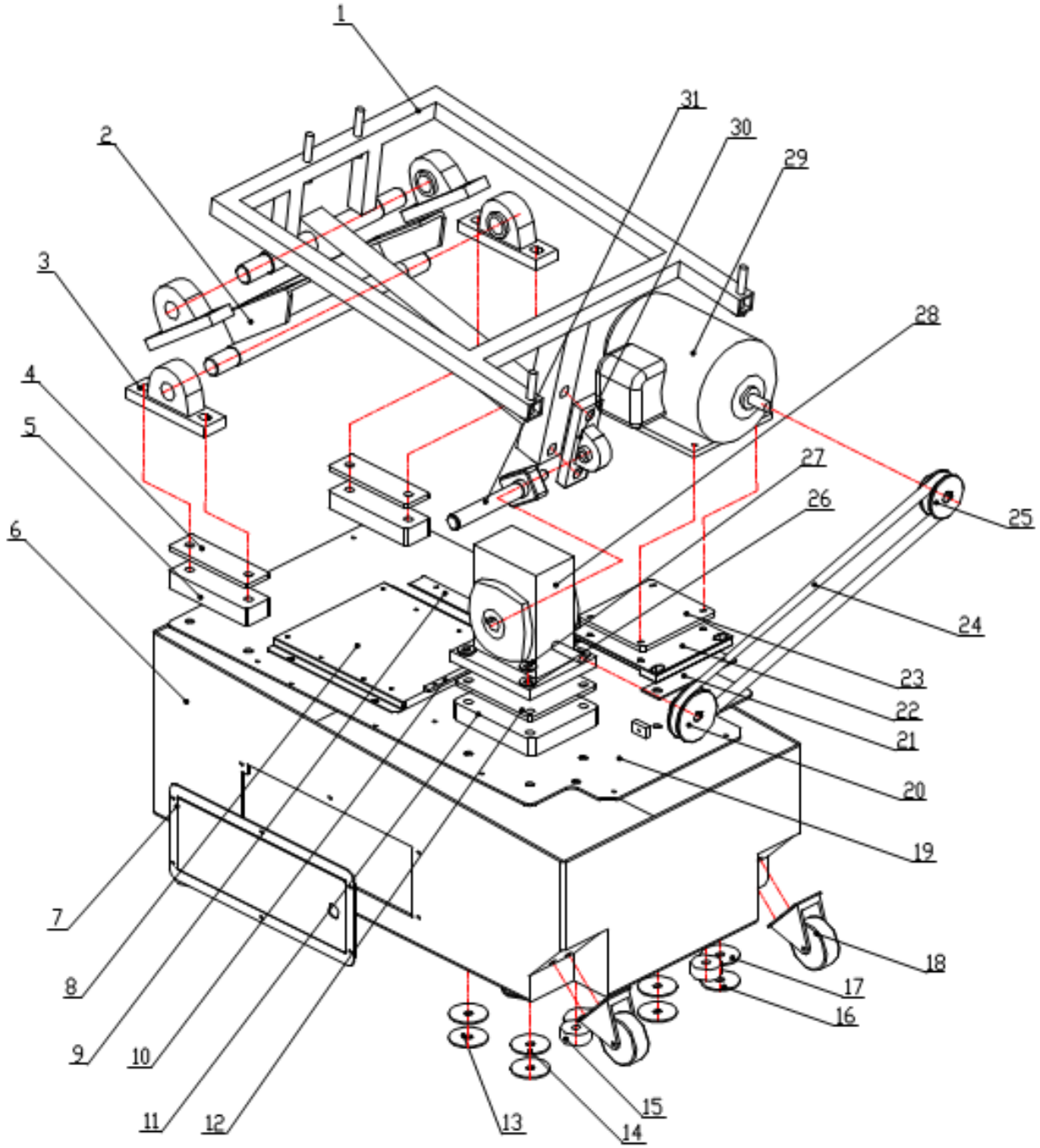

No.	Part No.	Diagram No.	Name	Qty	Spec.	Note
1	M102-112-000	MNJCC-02-03	Bracket 1	1	Electrolytic sheet	
2	M102-113-000	MNJCC-02-11	Bracket 2	1	Q235	
3	M102-402-000	20106000030	Spherical surface bearing	4	UCP205	
4	M102-614-000	MNJCC-02-13	Bearing holder damping board	2	Latex	

No.	Part No.	Diagram No.	Name	Qty	Spec.	Note
5	M102-615-000	MNJCC-02-12	Bearing holder mat	2	Bakelite	
6	M102-616-000	MNJCC-02-01	Base	1	FRP	
7	M102-114-000	MNJCC-02-02	Service door	1	Q235	
8	M102-115-000	MNJCC-02-04	Electricity fixation board	1	Electrolytic sheet	
9	M102-116-000	MNJCC-02-07	Block board	1	Q235	
10	M102-117-000	MNJCC-02-23	Orientation board	1	Q235	
11	M102-617-000	MNJCC-02-16	Gearbox mat	1	Bakelite	
12	M102-618-000	MNJCC-02-15	Gearbox damping board	1	Latex	
13	M102-118-000	MNJCC-02-18	Flat washer Iron board	10	Q235	
14	M102-619-000	MNJCC-02-17	A&C Flat washer	8	PU adhesive	
15	M102-620-000	MNJCC-02-10	Foot pad	4	Nylon	
16	M102-403-000	20113000014	Gasket	8	6X1.6h	
17	M102-621-000	MNJCC-02-19	Motor mat	8	PU adhesive	
18	M102-404-000	25501000004	Castor	2	2.5”	
19	M102-119-000	MNJCC-02-22	Motherboard	1	Q235	
20	M102-120-000	MNJCC-02-09	Driven round	1		
21	M102-622-000	MNJCC-02-21	Separate board	2	PU adhesive	
22	M102-121-000	MNJCC-02-06	Motor board	1	Q235	
23	M102-623-000	MNJCC-02-20	Motor damping board	1	Latex	
24	M102-405-000	26501000003	V type belt	1	A type L=600	
25	M102-122-000	MNJCC-02-08	Active round	1		
26	M102-624-000	MNJCC-02-14	Mat	8	PU adhesive	
27	M102-406-000	20113000032	C Gasket	16	10X3h	
28	M102-407-000	23402000002	Gearbox	1	WPWAK 50 type 30:1(A)	
29	M102-408-000	23405000013	Motor	1	YC7134	
30	M102-409-000	20106000029	Spherical surface bearing	1	UP201	
31	M102-123-000	MNJCC-02-15	Crankshaft	1	45#	

8.3 Console Assembly:

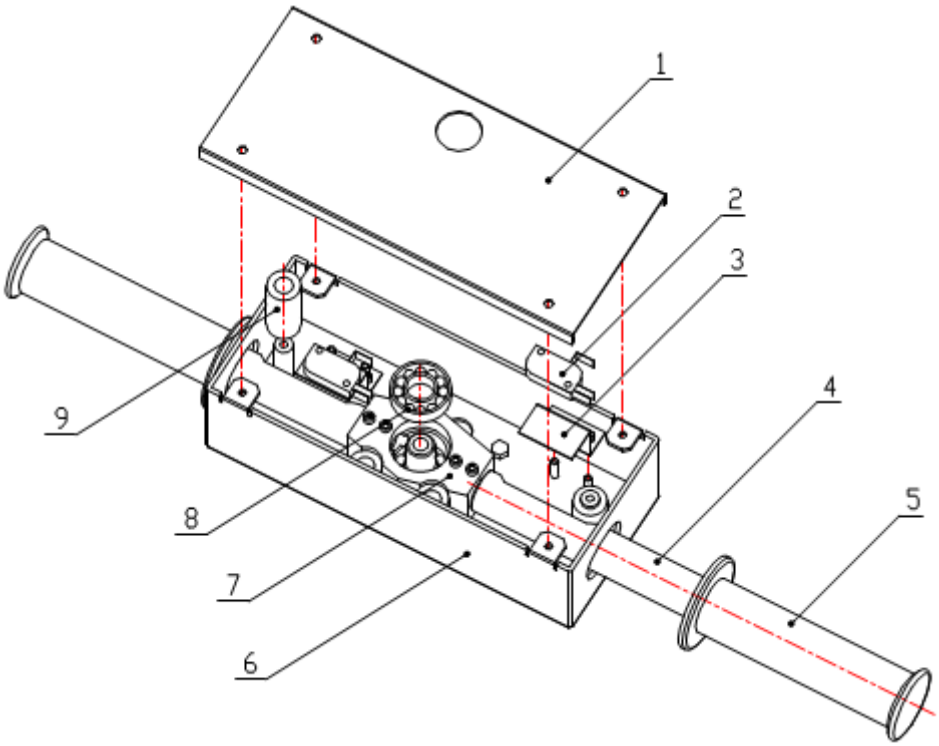

No.	Part No.	Diagram No.	Name	QTY	Spec.	Note
1	M102-124-000	MNJCC-03-06	Steering wheel	1	Q235	
2	M102-410-000	22604000007	Micro SW	2		
3	M102-125-000	MLJCC-03-03	Micro SW holder	2	Electrolytic sheet	
4	M102-126-000	MNJCC-03-02	Handle axes	2	Q235	
5	M102-411-000	25800000035	Handle	2	Latex	
6	M102-127-000	MNJCC-03-05	Outline border	1	Q235	
7	M102-128-000	MNJCC-03-04	Bearing seat	1	Q235	
8	M102-412-000	20106000028	Ball bearing	2	6002 D=32 d=15 B=9	
9	M102-625-000	MNJCC-03-01	Cushion	4	PU adhesive	

8.4 Electric Part:

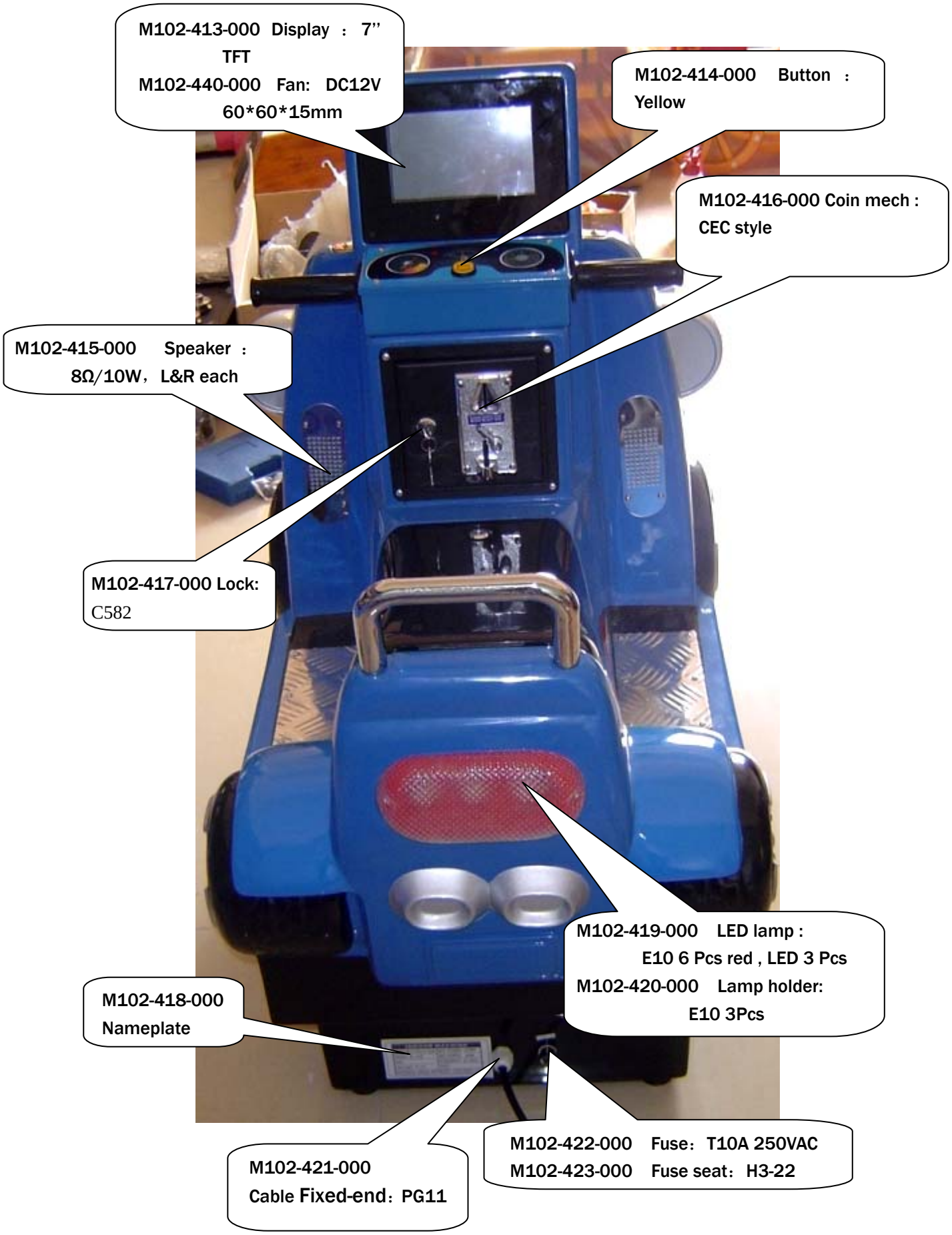

M102-424-000 LED double deck lamp ：
DC12V E12-B-LED-2-15 red 1Pcs
M102-425-000 LED double deck lamp：
DC12V E12-B-LED-2-15 blue 2 Pcs
M102-426-000 Lamp holder：
E12
M102-419-000
LED lamp：E10 Pcs red LED
M102-420-000
Lamp holder：E10
POLICE
M102-427-000 LED double deck lamp：
DC12V E12-B-LED-2-15 white 1pcs
M102-419-000 LED lamp：
E10 6 Pcs , red LED
M102-420-000 Lamp holder：
E10
M102-426-000 Lamp holder：
E12

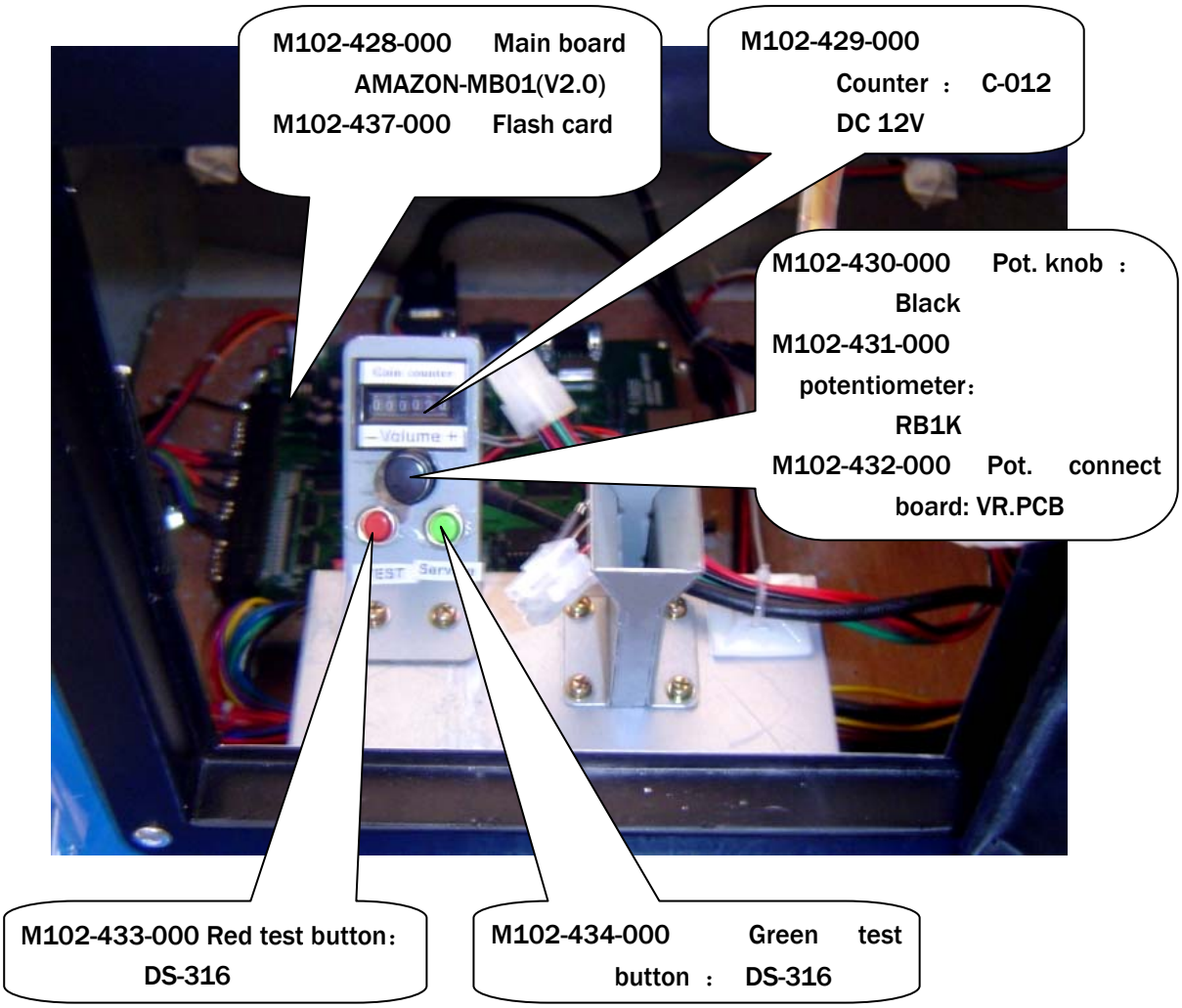
M102-428-000 Main board
AMAZON-MB01(V2.0)
M102-437-000 Flash card
M102-429-000
Counter : C-012
DC 12V
M102-430-000 Pot. knob :
Black
M102-431-000
potentiometer:
RB1K
M102-432-000 Pot. connect
board: VR.PCB
M102-433-000 Red test button:
DS-316
M102-434-000 Green test
button : DS-316

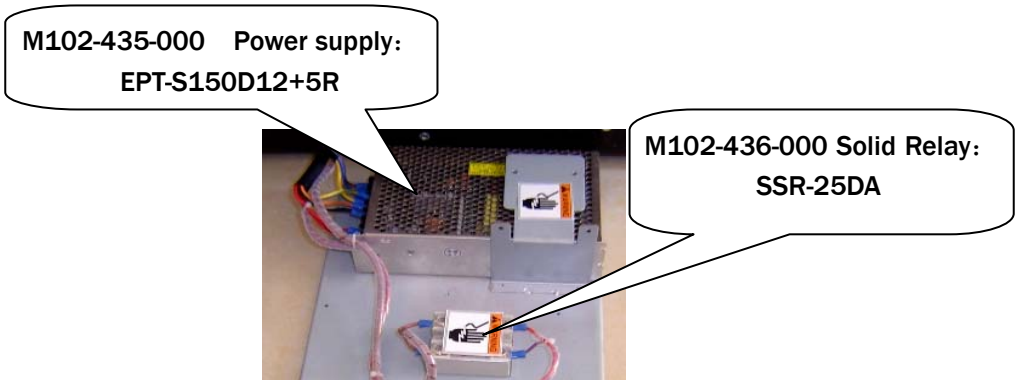
M102-435-000 Power supply:
EPT-S150D12+5R
M102-436-000 Solid Relay:
SSR-25DA

8.5 Decal

POLICE
3
1
1
POLICE
4

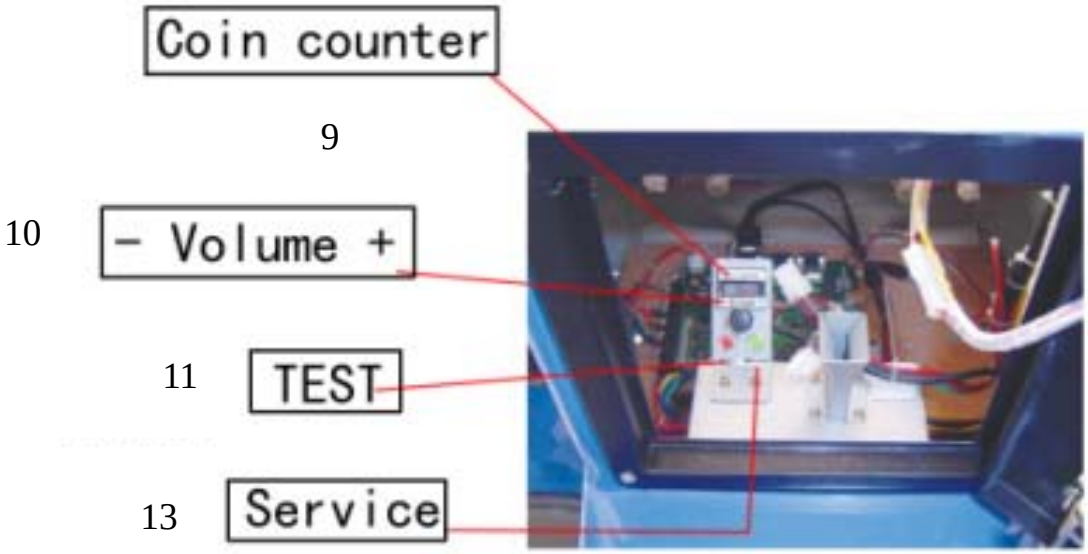
Coin counter
9
10
- Volume +
11
TEST
13
Service

15

2

6

5

AC 110V

14

FUSE T10A

8

12

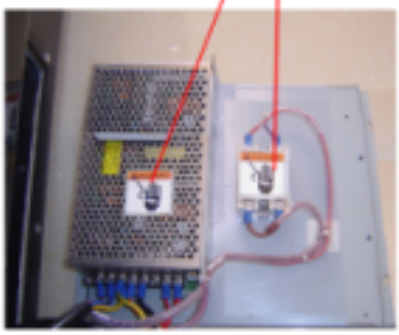

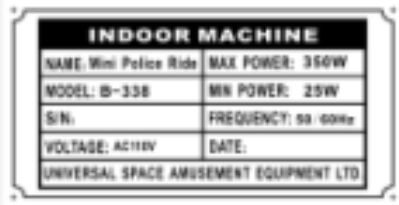

7

8.5 Decal:

No.	Part No.	Diagram No.	Name	QTY	Spec.	Note
1	M102-701-000	MNJCC-HM-06	Side logo	2	82X82	
2	M102-702-000	MNJCC-HM-02	Screen frame decal	1	240X185	
3	M102-703-000	MNJCC-HM-05	Front logo	1	138X138	
4	M102-704-000	MNJCC-HM-04	POLICE word decal	1	250X70	
5	M102-705-000	MNJCC-HM-01	Control panel decal	1	235X103	
6	M102-706-000	MNJCC-HM-03	Speaker button decal	1	20X20	
7	M102-707-000	MNJCC-HM-08	name plate 1	1	128X68	
8	M102-708-000	TY-HM-14	Fuse T10A	1	22×6	
9	M102-709-000	TY-HM-01	Coin counter label	1	30×6	
10	M102-710-000	TY-HM-03	Volume label	1	30×6	
11	M102-711-000	TY-HM-05	Test label	1	30×6	
12	M102-712-000	TY-HM-36	Warning label	2	41×42	
13	M102-713-000	TY-HM-09	Service label	1	30×6	
14	M102-714-000	TY-HM-40	110V label	1	25×6	
15	M102-715-000	MNJCC-HM-12	Monitor Top decal	1	235X53	